Company name:
Created by:
Phone:

Date: 21/10/2024

Qty.	Description
1	**Product name:** **Adapter 2 1/2"R - PN 16/40**

Note! Product picture may differ from actual product

Product No.: On request	
Product No:	On request
EAN number:	On request
Materials:	
Material:	Stainless steel EN 1.4308 AISI 304
Installation:	
Maximum operating pressure:	PN 16/40 bar
Type of connection:	R DIN
Pipework connection:	DN 65
Size of connection:	2 1/2 inch
Flange standard:	DIN EN 1092-1
Pressure rating for connection:	PN 16 / PN 40
Adapter extension length:	170 mm
Others:	
Gross weight:	4.8 kg
Shipping volume:	0.006 m³
Country of origin:	CN
Custom tariff no.:	73072100

Company name:
Created by:
Phone:

Date: 21/10/2024

Description	Value
General information:	
Product name:	Adapter 2 1/2"R - PN 16/40
Product No:	On request
EAN number:	On request
Materials:	
Material:	Stainless steel
Material:	EN 1.4308
Material:	AISI 304
Installation:	
Maximum operating pressure:	PN 16/40 bar
Type of connection:	R
Type of connection:	DIN
Pipework connection:	DN 65
Size of connection:	2 1/2 inch
Flange standard:	DIN EN 1092-1
Pressure rating for connection:	PN 16 / PN 40
Adapter extension length:	170 mm
Others:	
Gross weight:	4.8 kg
Shipping volume:	0.006 m³
Country of origin:	CN
Custom tariff no.:	73072100

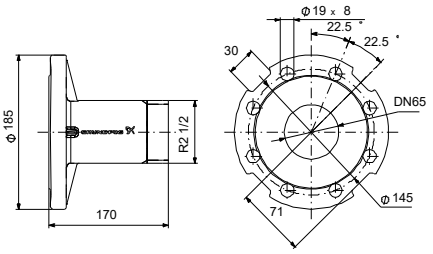

Company name:
Created by:
Phone:

Date: 21/10/2024

On request Adapter 2 1/2"R - PN 16/40

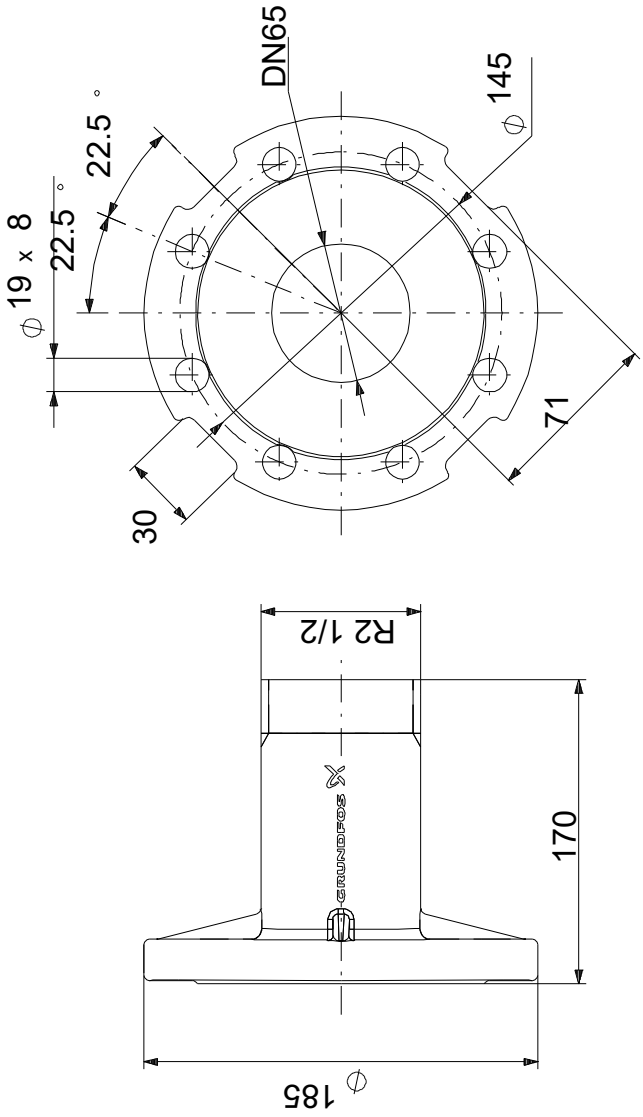

Note! All units are in [mm] unless others are stated.
Disclaimer: This simplified dimensional drawing does not show all details.

Company name:
Created by:
Phone:

Date: 21/10/2024

Order Data:

Position	Your pos.	Product name	Amount	Product No	Total
		Adapter 2 1/2"R - PN 16/40	1	On request	