Company name:
Created by:
Phone:

Date: 01/12/2023

Qty.	Description
1	**TP 80-700/2 A-F-A-BQQE-RW1**

Note! Product picture may differ from actual product

Product No.: On request

Single-stage, close-coupled, volute pump with in-line suction and discharge ports of identical diameter. The pump is of the top-pull-out design, i.e. the power head (motor, pump head and impeller) can be removed for maintenance or service while the pump housing remains in the pipework.

The pump is fitted with an unbalanced rubber bellows seal. The shaft seal is according to EN 12756. Pipework connection is via PN 16 DIN flanges (EN 1092-2 and ISO 7005-2).

The pump is fitted with a fan-cooled asynchronous motor.

The product's minimum efficiency index (MEI) is greater or equal to 0.70. This is by the Commission Regulation (EU) considered as an indicative benchmark for best-performing water pump available on the market as from 1 January 2013.

Cast-iron parts have an epoxy-based coating made in a cathodic electro-deposition (CED) process. CED is a high-quality dip-painting process where an electrical field around the products ensures deposition of paint particles as a thin, well-controlled layer on the surface.

Pump

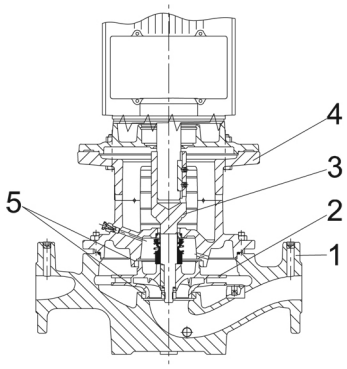

1: Pump housing
2: Impeller
3: Stub shaft
4: Pump head/motor stool
5: Wear rings

The pump housing is provided with a replaceable brass neck ring to reduce the amount of liquid running from the outlet side of the impeller to the inlet side.

The impeller is secured to the shaft with a nut.

The pump is fitted with an unbalanced rubber bellows seal with torque transmission across the spring and around the bellows. Due to the bellows, the seal does not wear the shaft, and the axial movement is not prevented by deposits on the shaft.

Seal faces:

- Rotating seal ring material: silicon carbide (SiC)
- Stationary seat material: silicon carbide (SiC)

This material pairing is used where higher corrosion resistance is required. The high hardness of this material pairing offers good resistance against abrasive particles.

Secondary seal material: EPDM (ethylene-propylene rubber)

Qty.	Description
1	EPDM has excellent resistance to hot water. EPDM is not suitable for mineral oils. A circulation of liquid through the duct of the air vent screw ensures lubrication and cooling of the shaft seal. The flanges have tappings for mounting of pressure gauges. The motor stool forms connection between the pump housing and the motor, and is equipped with a manual air vent screw for venting of the pump housing and the shaft seal chamber. The sealing between motor stool and pump housing is an O-ring. The central part of the motor stool is provided with guards for protection against the shaft and coupling. The pump shaft is fastened directly on the motor shaft with key and set screws. The pump is mounted with a base plate. **Motor** The motor is a totally enclosed, fan-cooled motor with principal dimensions to IEC and DIN standards. Electrical tolerances comply with IEC 60034. The motor is flange-mounted with free-hole flange (FF). Motor-mounting designation in accordance with IEC 60034-7: IM B 5, IM V 1 (Code I) / IM 3001, IM 3011 (Code II). The motor efficiency is classified as IE3 in accordance with IEC 60034-30-1. The motor has thermistors (PTC sensors) in the windings in accordance with DIN 44081/DIN 44082. The protection reacts to both slow- and quick-rising temperatures, e.g. constant overload and stalled conditions. Thermal switches must be connected to an external control circuit in a way which ensures that the automatic reset cannot cause accidents. The motors must be connected to a motor-protective circuit breaker according to local regulations. The motor can be connected to a variable speed drive for adjustment of pump performance to any duty point. Grundfos CUE offers a range of variable speed drives. Please find more information in Grundfos Product Center. **Further product details** Cast-iron parts have an epoxy-based coating made in a cathodic electro-deposition (CED) process. CED is a high-quality dip-painting process where an electrical field around the products ensures deposition of paint particles as a thin, well-controlled layer on the surface. **Technical data** Controls: Frequency converter: None Liquid: Liquid temperature range: -25 .. 120 °C Technical: Pump speed on which pump data are based: 2950 rpm Rated flow: 132 m³/h Rated head: 59.7 m Actual impeller diameter: 219 mm Code for shaft seal: BQQE Curve tolerance: ISO9906:2012 3B Materials: Pump housing: Cast iron EN-GJL-250 ASTM class 35 Impeller: Cast iron EN-GJL-200 ASTM class 30 Installation: Range of ambient temperature: -20 .. 55 °C Maximum operating pressure: 16 bar Max pressure at stated temp: 16 bar / 120 °C

Company name:
Created by:
Phone:

Date: 01/12/2023

Qty.	Description	
1	Type of connection:	DIN
	Size of connection:	DN 80
	Pressure rating for connection:	PN 16
	Port-to-port length:	500 mm
	Flange size for motor:	FF350
	Electrical data:	
	Motor type:	SIEMENS
	Rated power - P2:	30 kW
	Mains frequency:	50 Hz
	Rated voltage:	3 x 380-420D/660-725Y V
	Rated current:	53/31 A
	Starting current:	700-700 %
	Cos phi - power factor:	0.87
	Rated speed:	2955 rpm
	IE efficiency:	IE3 93,3%
	IE Efficiency class:	IE3
	Motor efficiency at full load:	93.3-93.3 %
	Motor efficiency at 3/4 load:	93.5-93.5 %
	Motor efficiency at 1/2 load:	92.9-92.9 %
	Number of poles:	2
	Enclosure class (IEC 34-5):	IP55
	Insulation class (IEC 85):	F
	Motor No:	99032179
	Others:	
	Minimum efficiency index, MEI ≥:	0.70
	Net weight:	304 kg
	Gross weight:	359 kg
	Shipping volume:	0.771 m³
	Danish VVS No.:	381705700
	Finnish LVI No.:	4616110
	Country of origin:	HU
	Custom tariff no.:	84137051

Company name:
Created by:
Phone:

Date: 01/12/2023

On request TP 80-700/2 A-F-A-BQQE-RW1 50 Hz

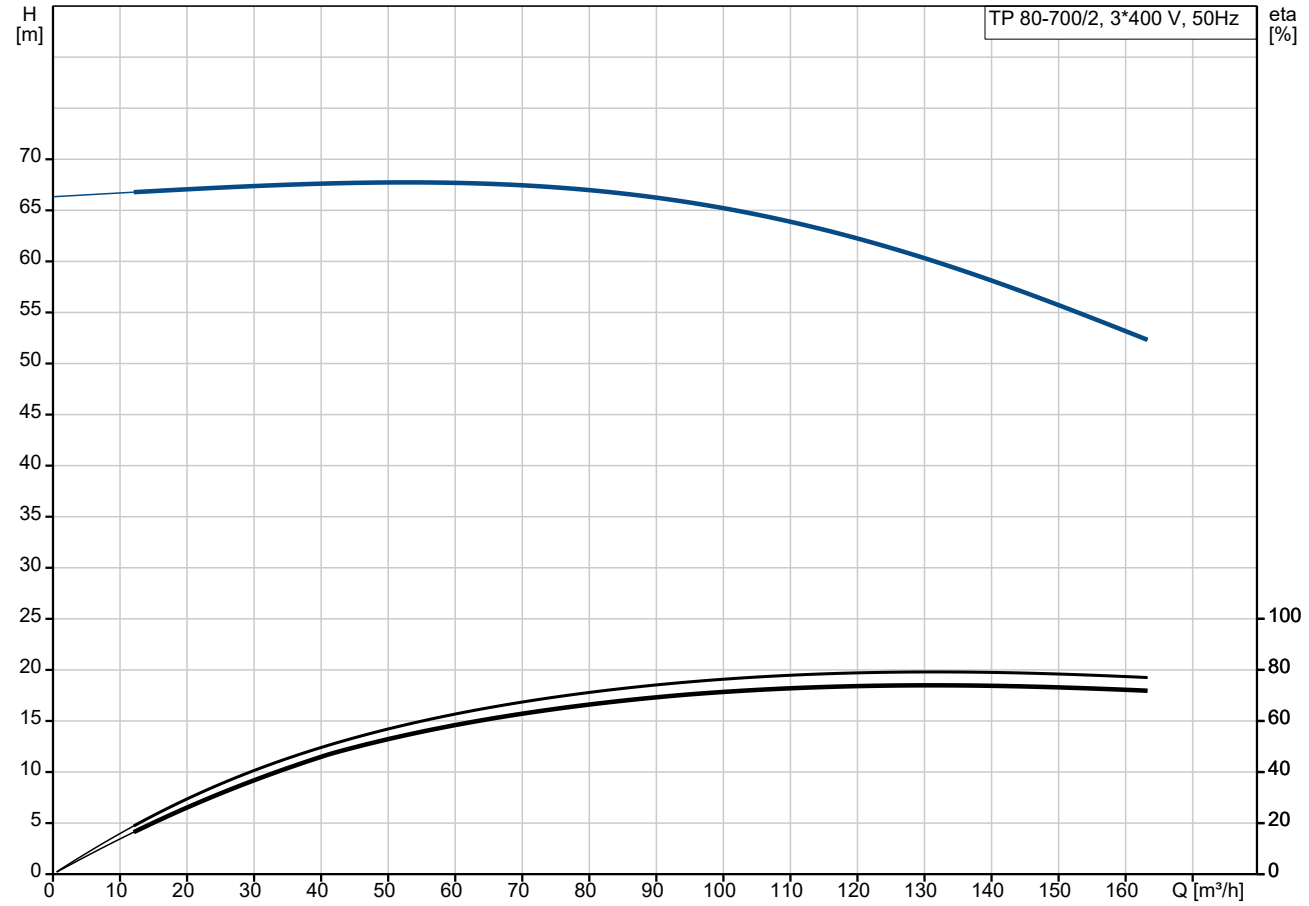

Pumped liquid = Water
Liquid temperature during operation = 20 °C
Density = 998.2 kg/m³

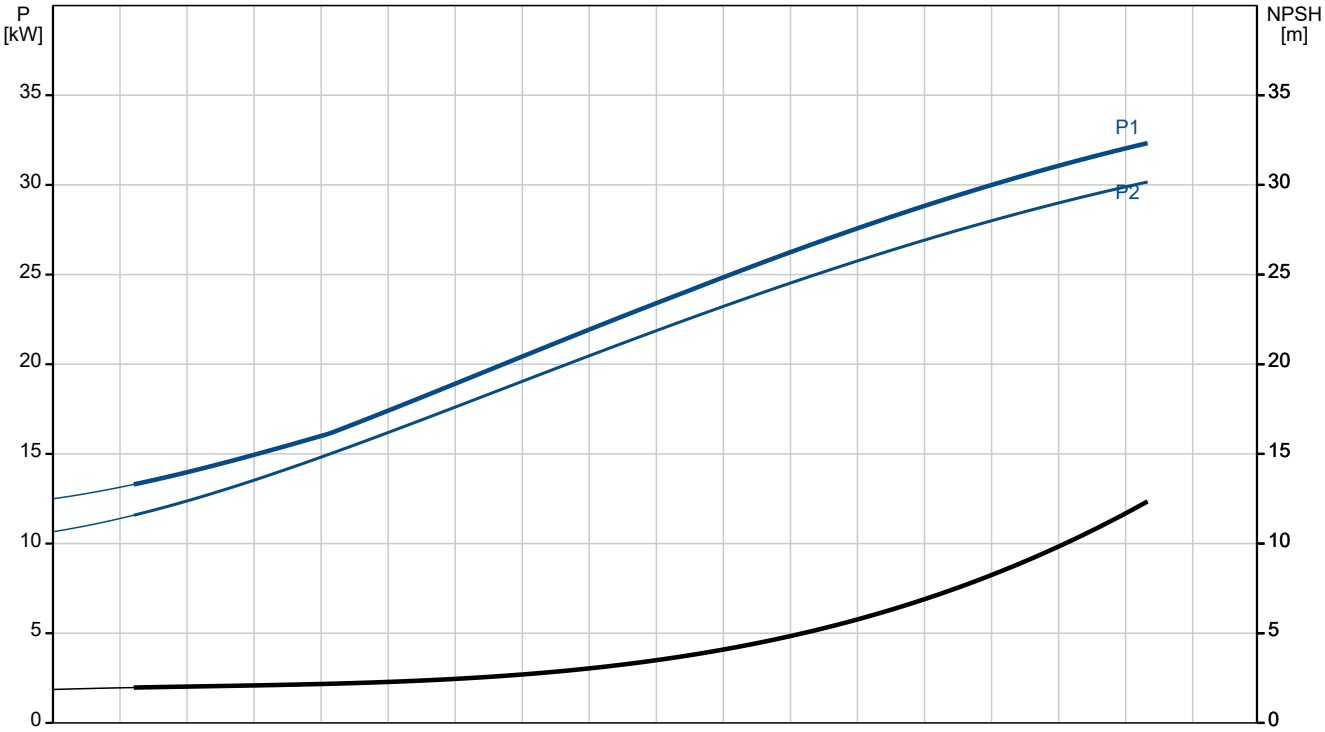

Company name:
Created by:
Phone:

Date: 01/12/2023

Description	Value
General information:	
Product name:	TP 80-700/2 A-F-A-BQQE-RW1
Product No:	On request
EAN number:	On request
Technical:	
Pump speed on which pump data are based:	2950 rpm
Rated flow:	132 m³/h
Rated head:	59.7 m
Maximum head:	700 dm
Actual impeller diameter:	219 mm
Code for shaft seal:	BQQE
Curve tolerance:	ISO9906:2012 3B
Pump version:	A
Materials:	
Pump housing:	Cast iron
Pump housing:	EN-GJL-250
Pump housing:	ASTM class 35
Impeller:	Cast iron
Impeller:	EN-GJL-200
Impeller:	ASTM class 30
Material code:	A
Installation:	
Range of ambient temperature:	-20 .. 55 °C
Maximum operating pressure:	16 bar
Max pressure at stated temp:	16 bar / 120 °C
Type of connection:	DIN
Size of connection:	DN 80
Pressure rating for connection:	PN 16
Port-to-port length:	500 mm
Flange size for motor:	FF350
Connect code:	F
Liquid:	
Liquid temperature range:	-25 .. 120 °C
Electrical data:	
Motor type:	SIEMENS
Rated power - P2:	30 kW
Mains frequency:	50 Hz
Rated voltage:	3 x 380-420D/660-725Y V
Rated current:	53/31 A
Starting current:	700-700 %
Cos phi - power factor:	0.87
Rated speed:	2955 rpm
IE efficiency:	IE3 93,3%
IE Efficiency class:	IE3
Motor efficiency at full load:	93.3-93.3 %
Motor efficiency at 3/4 load:	93.5-93.5 %
Motor efficiency at 1/2 load:	92.9-92.9 %
Number of poles:	2
Enclosure class (IEC 34-5):	IP55
Insulation class (IEC 85):	F
Built-in motor protection:	PTC
Motor No:	99032179
Controls:	
Frequency converter:	None
Others:	
Minimum efficiency index, MEI ≥:	0.70

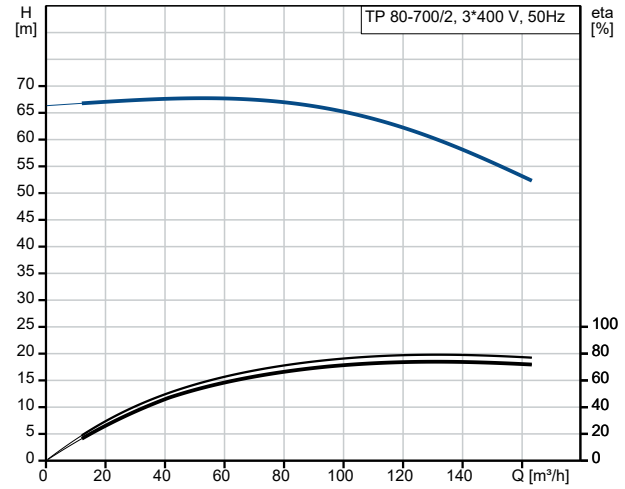

Pumped liquid = Water
Liquid temperature during operation = 20 °C
Density = 998.2 kg/m³

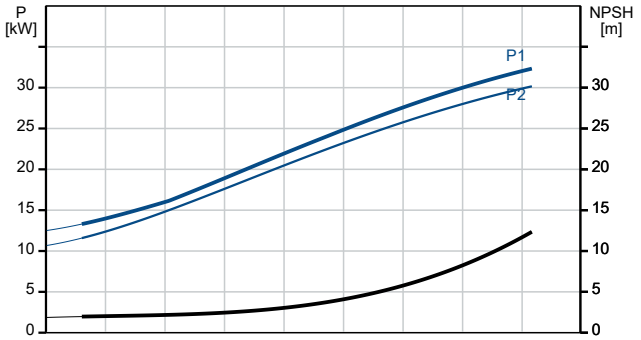

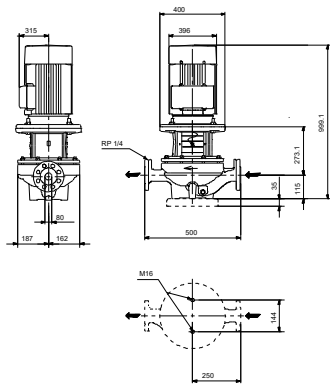

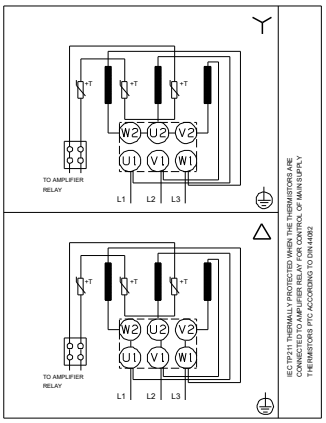

Company name:
Created by:
Phone:

Date: 01/12/2023

Description	Value
Net weight:	304 kg
Gross weight:	359 kg
Shipping volume:	0.771 m³
Danish VVS No.:	381705700
Finnish LVI No.:	4616110
Country of origin:	HU
Custom tariff no.:	84137051

Company name:
Created by:
Phone:

Date: 01/12/2023

On request TP 80-700/2 A-F-A-BQQE-RW1 50 Hz

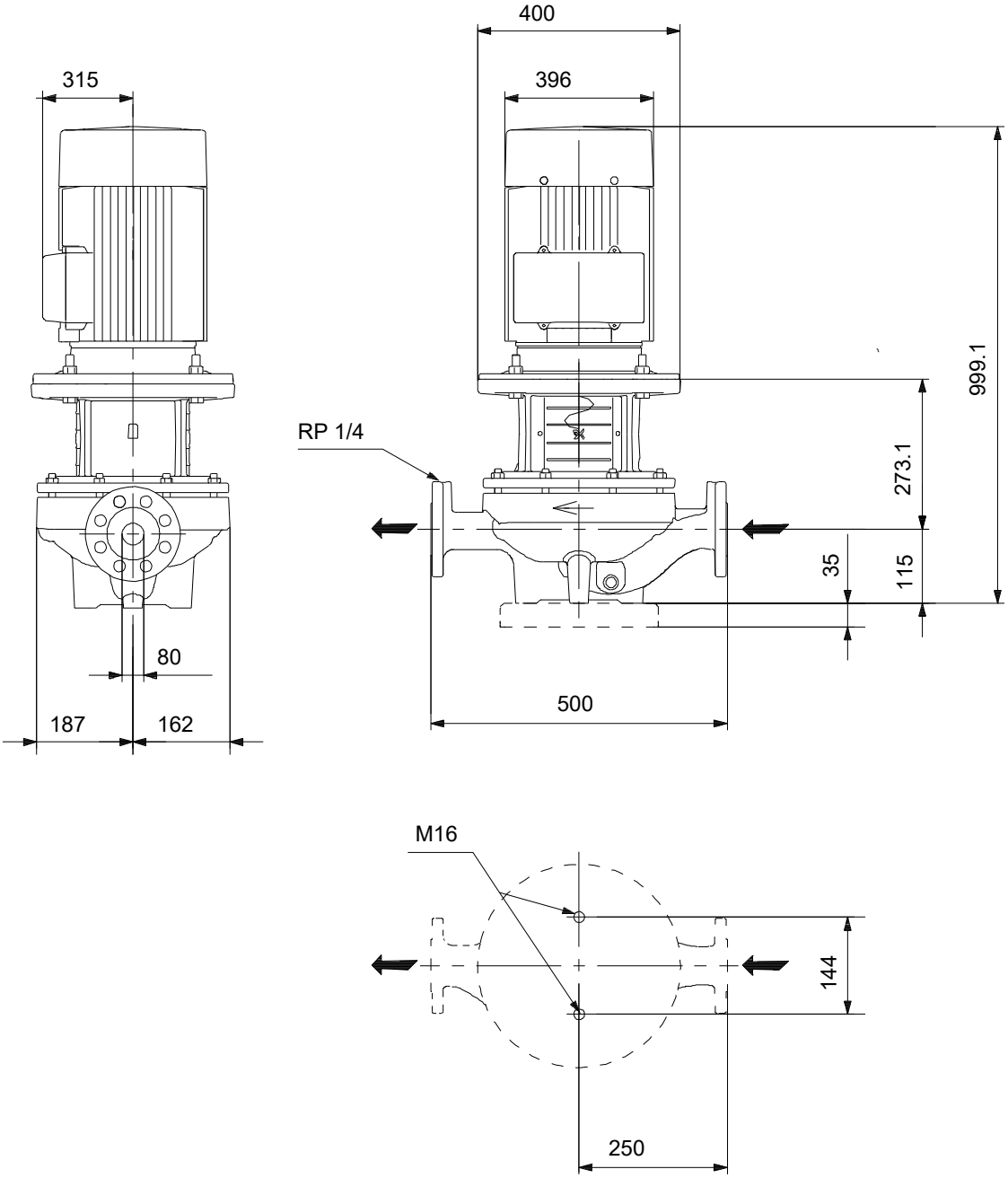

Note! All units are in [mm] unless others are stated.
Disclaimer: This simplified dimensional drawing does not show all details.

Company name:
Created by:
Phone:

Date: 01/12/2023

Order Data:

Position	Your pos.	Product name	Amount	Product No	Total
		TP 80-700/2	1	On request	Price on request