Company name:
Created by:
Phone:

Date: 29/11/2023

Qty.	Description
1	**TP 25-80/2 A-O-A-BQQE-BW1**

Note! Product picture may differ from actual product

Product No.: On request

Single-stage, close-coupled, volute pump with in-line suction and discharge ports of identical diameter. The pump is of the top-pull-out design, i.e. the power head (motor, pump head and impeller) can be removed for maintenance or service while the pump housing remains in the pipework.

The pump is fitted with an unbalanced rubber bellows seal. The shaft seal is according to EN 12756. The pump is fitted with a fan-cooled asynchronous motor.

Cast-iron parts have an epoxy-based coating made in a cathodic electro-deposition (CED) process. CED is a high-quality dip-painting process where an electrical field around the products ensures deposition of paint particles as a thin, well-controlled layer on the surface.

Pump

The pump housing is provided with a replaceable stainless steel/PTFE neck ring to reduce the amount of liquid running from the discharge side of the impeller to the suction side.

The impeller is secured with a split cone pressed onto the shaft.

The pump is fitted with an unbalanced rubber bellows seal with torque transmission across the spring and around the bellows. Due to the bellows, the seal does not wear the shaft, and the axial movement is not prevented by deposits on the shaft.

Seal faces:

- Rotating seal ring material: silicon carbide (SiC)
- Stationary seat material: silicon carbide (SiC)

This material pairing is used where higher corrosion resistance is required. The high hardness of this material pairing offers good resistance against abrasive particles.

Secondary seal material: EPDM (ethylene-propylene rubber)

EPDM has excellent resistance to hot water. EPDM is not suitable for mineral oils.

A circulation of liquid through the duct of the air vent screw ensures lubrication and cooling of the shaft seal.

The motor stool forms connection between the pump housing and the motor, and is equipped with a manual air vent screw for venting of the pump housing and the shaft seal chamber. The sealing between motor stool and pump housing is an O-ring or a flat gasket.

The central part of the motor stool is provided with guards for protection against the shaft and coupling. Motor and pump shaft are connected via a shell coupling.

Motor

The motor is a totally enclosed, fan-cooled motor with principal dimensions to IEC and DIN standards. Electrical tolerances comply with IEC 60034.

The motor is flange-mounted with tapped-hole flange (FT).

Motor-mounting designation in accordance with IEC 60034-7: IM B 14, IM V 18 (Code I) / IM 3601, IM 3611 (Code II).

The motor efficiency is classified as IE2 in accordance with IEC 60034-30.

The motor has built-in thermal protection (PTO current and temperature sensors) in accordance with IEC 60034-11 and requires no further motor protection. The protection reacts to both slow- and quick-rising temperatures, e.g. constant overload and stalled conditions.

As the thermal protection incorporates automatic reset, the motor must be connected in a way which ensures that the automatic reset cannot cause accidents.

Further product details

Qty.	Description
1	Cast-iron parts have an epoxy-based coating made in a cathodic electro-deposition (CED) process. CED is a high-quality dip-painting process where an electrical field around the products ensures deposition of paint particles as a thin, well-controlled layer on the surface.

Technical data

Controls:

Frequency converter:	None

Liquid:

Liquid temperature range:	-25 .. 120 °C

Technical:

Pump speed on which pump data are based:	2820 rpm
Rated flow:	6.32 m³/h
Rated head:	4.04 m
Actual impeller diameter:	80 mm
Code for shaft seal:	BQQE
Curve tolerance:	ISO9906:2012 3B2

Materials:

Pump housing:	Cast iron EN-GJL-150 ASTM class 25
Impeller:	Composite PES+30% GF

Installation:

Range of ambient temperature:	-30 .. 40 °C
Maximum operating pressure:	10 bar
Max pressure at stated temp:	10 bar / 120 °C
Type of connection:	G
Size of connection:	DN 25
Pressure rating for connection:	PN 10
Port-to-port length:	180 mm
Flange size for motor:	FT75

Electrical data:

Motor type:	71A
Rated power - P2:	0.18 kW
Mains frequency:	50 Hz
Rated voltage:	1 x 220-230 V
Rated current:	1.30-1.23 A
Starting current:	490-550 %
Cos phi - power factor:	0.97-0.95
Rated speed:	2850-2880 rpm
IE Efficiency class:	IE2
Motor efficiency at full load:	65.0-65.0 %
Motor efficiency at 3/4 load:	66.3-67.6 %
Motor efficiency at 1/2 load:	57.4-58.5 %
Number of poles:	2
Enclosure class (IEC 34-5):	55 Dust/Jetting
Insulation class (IEC 85):	F
Motor No:	92614010

Others:

Minimum efficiency index, MEI ≥:	0.55

Company name:
Created by:
Phone:

Date: 29/11/2023

Qty.	Description	
1	Net weight:	9.4 kg
	Gross weight:	11.4 kg
	Shipping volume:	0.041 m³
	Danish VVS No.:	381800080
	Country of origin:	HU
	Custom tariff no.:	84137051

Company name:
Created by:
Phone:

Date: 29/11/2023

On request TP 25-80/2 A-O-A-BQQE-BW1 50 Hz

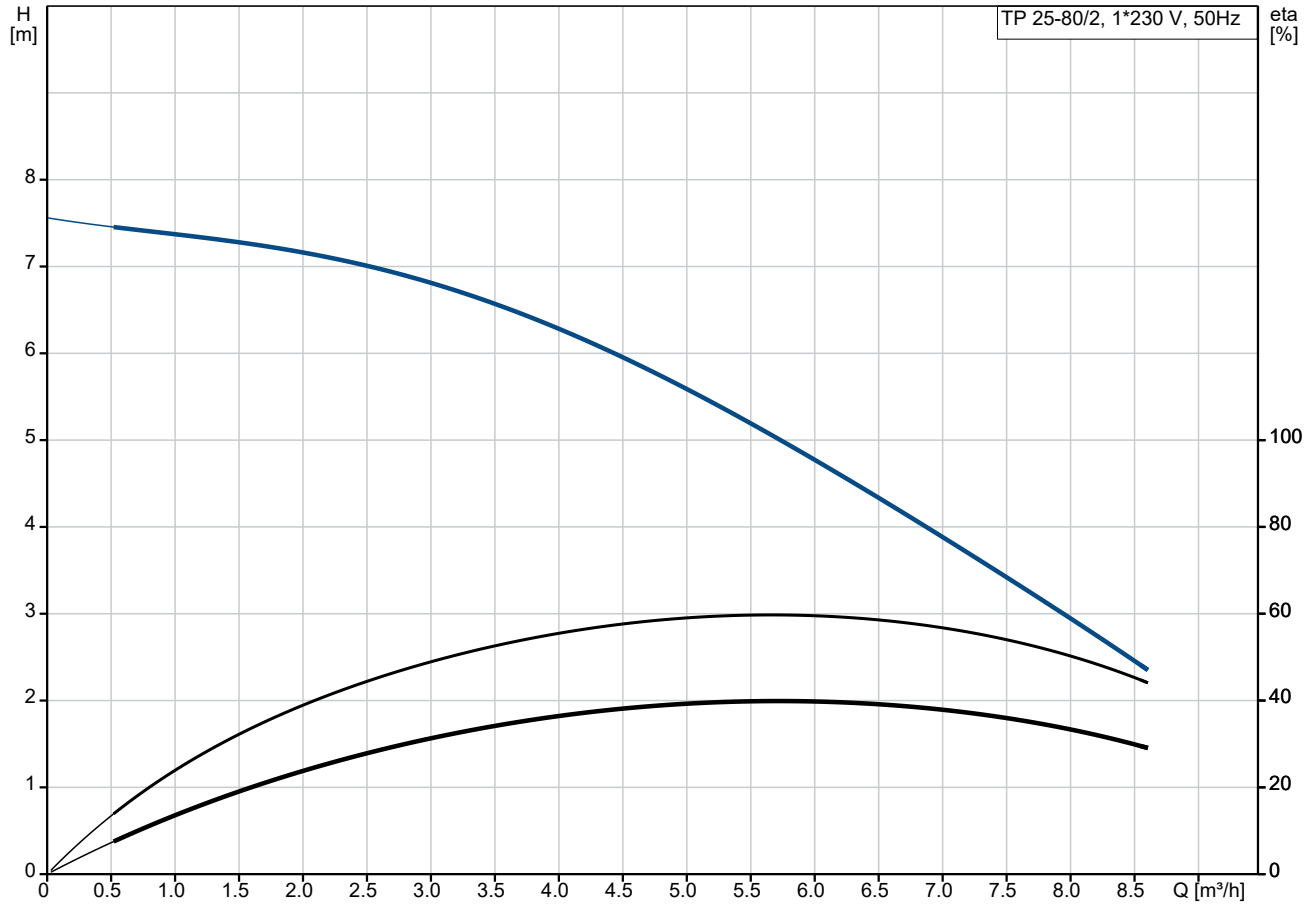

Pumped liquid = Water
Liquid temperature during operation = 20 °C
Density = 998.2 kg/m³

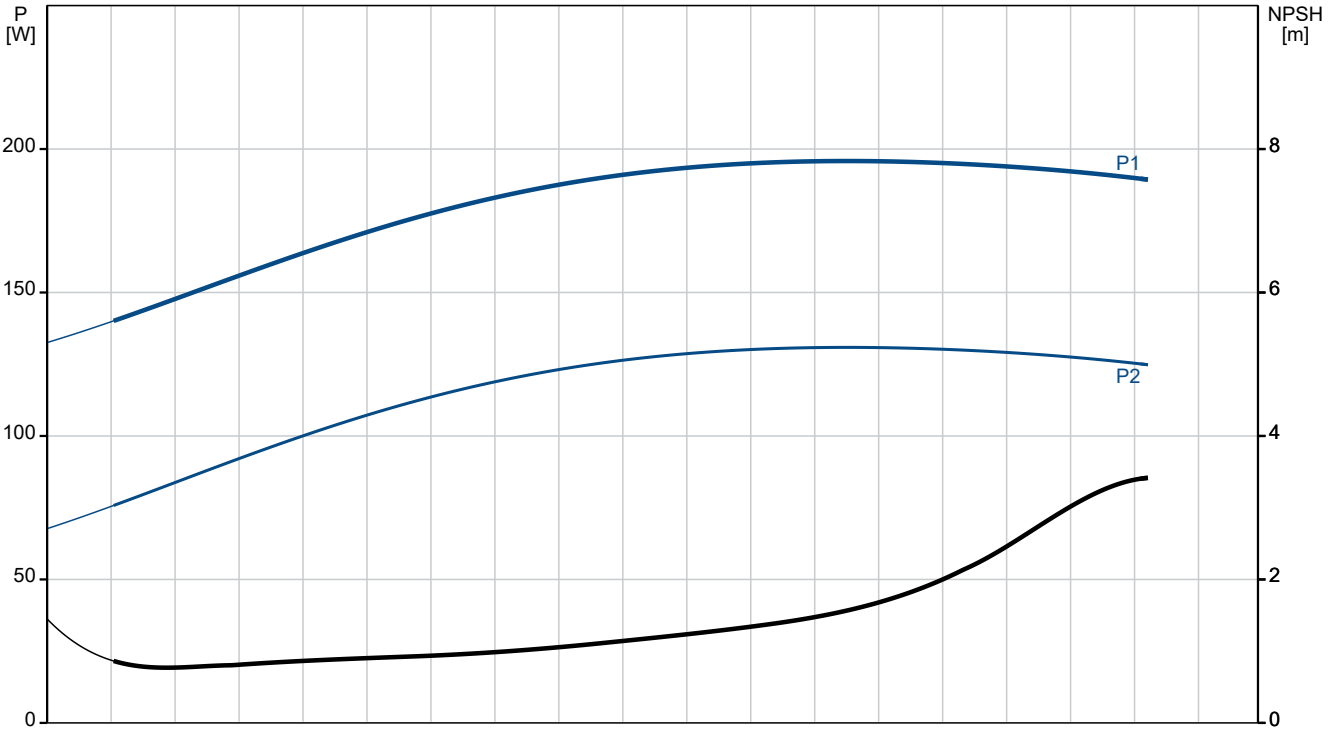

Company name:
Created by:
Phone:

Date: 29/11/2023

Description	Value
General information:	
Product name:	TP 25-80/2 A-O-A-BQQE-BW1
Product No:	On request
EAN number:	On request
Technical:	
Pump speed on which pump data are based:	2820 rpm
Rated flow:	6.32 m³/h
Rated head:	4.04 m
Maximum head:	80 dm
Actual impeller diameter:	80 mm
Code for shaft seal:	BQQE
Curve tolerance:	ISO9906:2012 3B2
Pump version:	A
Materials:	
Pump housing:	Cast iron
Pump housing:	EN-GJL-150
Pump housing:	ASTM class 25
Impeller:	Composite
Impeller:	PES+30% GF
Material code:	A
Installation:	
Range of ambient temperature:	-30 .. 40 °C
Maximum operating pressure:	10 bar
Max pressure at stated temp:	10 bar / 120 °C
Type of connection:	G
Size of connection:	DN 25
Pressure rating for connection:	PN 10
Port-to-port length:	180 mm
Flange size for motor:	FT75
Connect code:	O
Liquid:	
Liquid temperature range:	-25 .. 120 °C
Electrical data:	
Motor type:	71A
Rated power - P2:	0.18 kW
Mains frequency:	50 Hz
Rated voltage:	1 x 220-230 V
Rated current:	1.30-1.23 A
Starting current:	490-550 %
Cos phi - power factor:	0.97-0.95
Rated speed:	2850-2880 rpm
IE Efficiency class:	IE2
Motor efficiency at full load:	65.0-65.0 %
Motor efficiency at 3/4 load:	66.3-67.6 %
Motor efficiency at 1/2 load:	57.4-58.5 %
Number of poles:	2
Enclosure class (IEC 34-5):	55 Dust/Jetting
Insulation class (IEC 85):	F
Built-in motor protection:	PTO
Motor No:	92614010
Controls:	
Frequency converter:	None
Others:	
Minimum efficiency index, MEI ≥:	0.55
Net weight:	9.4 kg
Gross weight:	11.4 kg

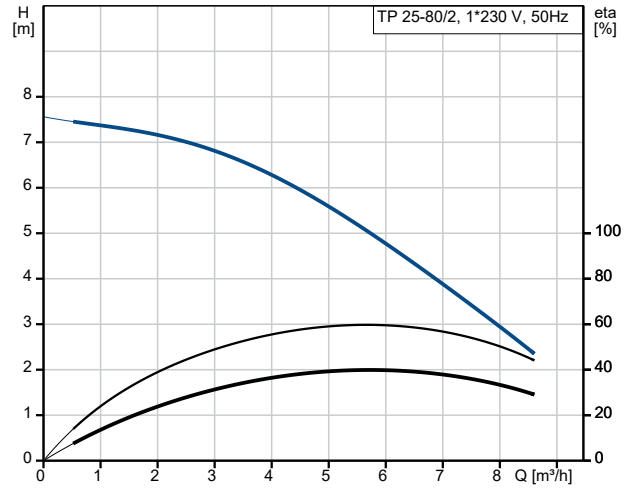

Pumped liquid = Water
Liquid temperature during operation = 20 °C
Density = 998.2 kg/m³

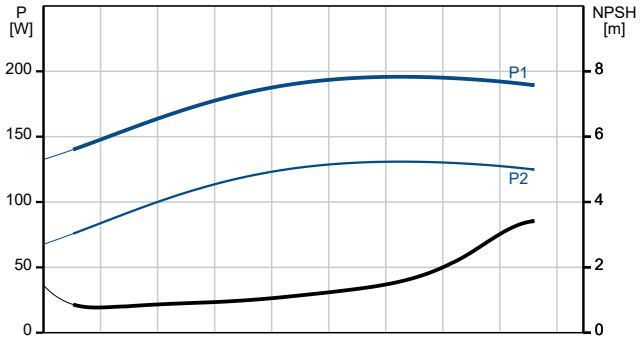

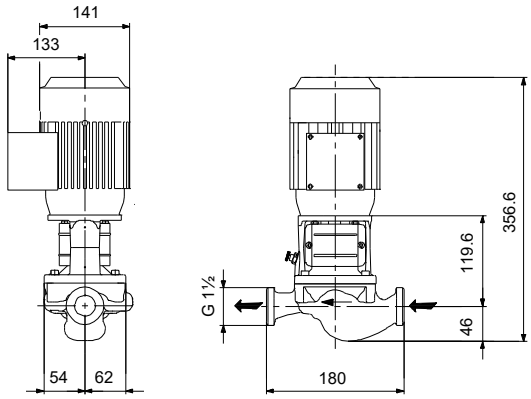

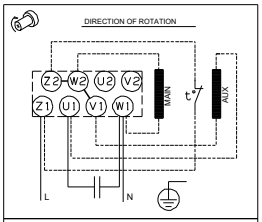

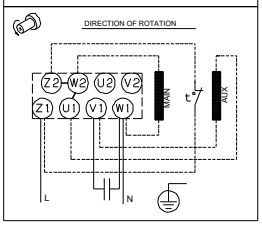

Company name:
Created by:
Phone:

Date: 29/11/2023

Description	Value
Shipping volume:	0.041 m³
Danish VVS No.:	381800080
Country of origin:	HU
Custom tariff no.:	84137051

Company name:
Created by:
Phone:

Date: 29/11/2023

On request TP 25-80/2 A-O-A-BQQE-BW1 50 Hz

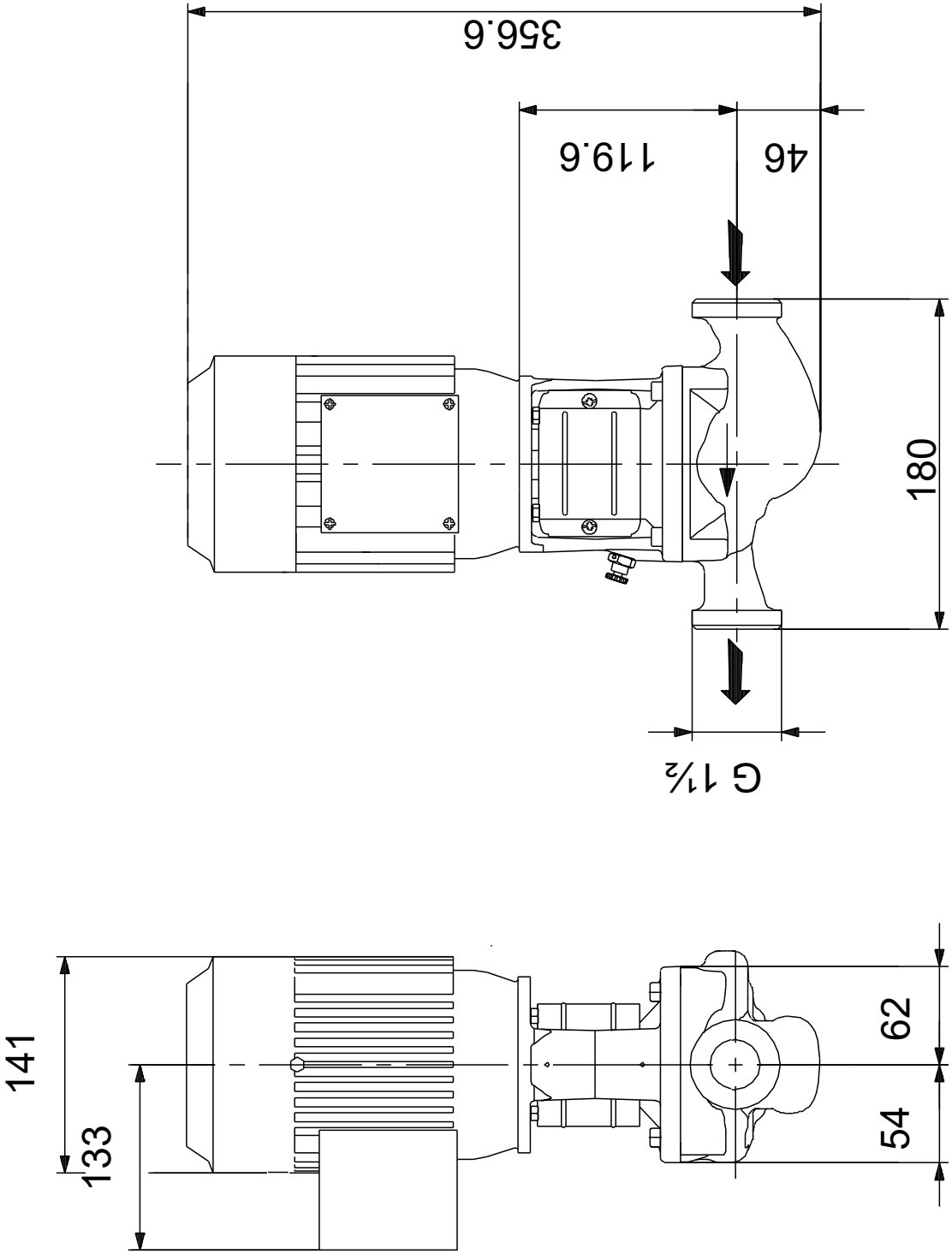

Note! All units are in [mm] unless others are stated.
Disclaimer: This simplified dimensional drawing does not show all details.

Company name:
Created by:
Phone:

Date: 29/11/2023

Order Data:

Position	Your pos.	Product name	Amount	Product No	Total
		TP 25-80/2	1	On request	Price on request